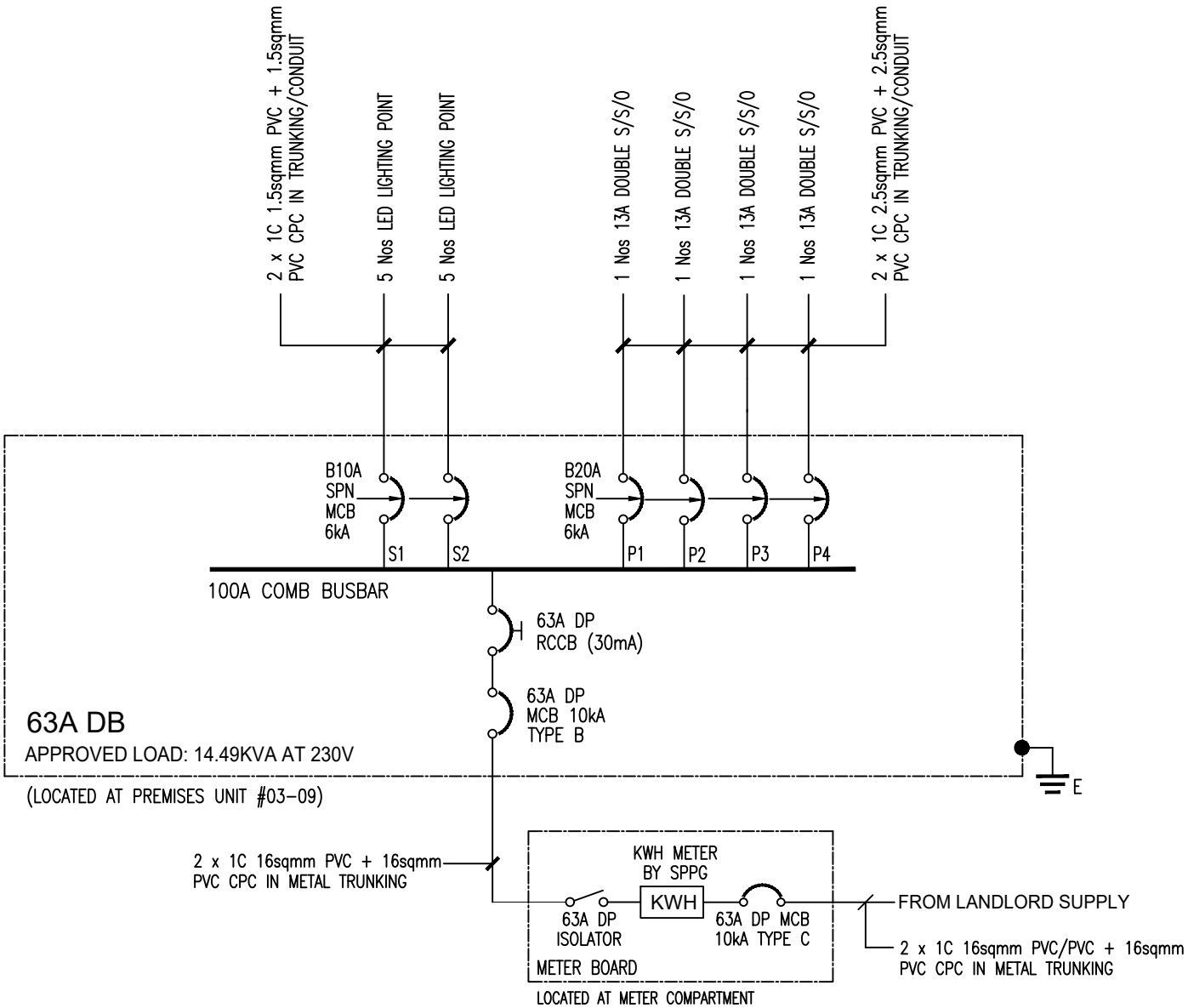

CLIENT / ADDRESS :	CONSULTANT :	ELECTRICAL CONTRACTOR :	DRAWING TITLE :		CHECKED :	DATE :
3 INTERNATIONAL BUSINESS PARK #03-09 NORDIC EUROPEAN CENTRE SINGAPORE 609927		I2R M&E PTE. LTD. 709 Yishun Avenue 5 #01-K1 Singapore 760709 HP: 9777 1983	63A DB SINGLE LINE DIAGRAM (SLD)		Ryan	5 FEB 2025
					DRAWING NO. : i2R-NEC-SLD	REV : 0